STEPPER MOTOR

# Stepper motor NG 3-phase 325 V DC
## Used together with VariMax25 NG

F22025401 VariMax-motor25 NG




- Adapted for variable speed control
- Compact built-in dimensions
- CE-approved
- Five-year product warranty

IBC control

# DIMENSIONS

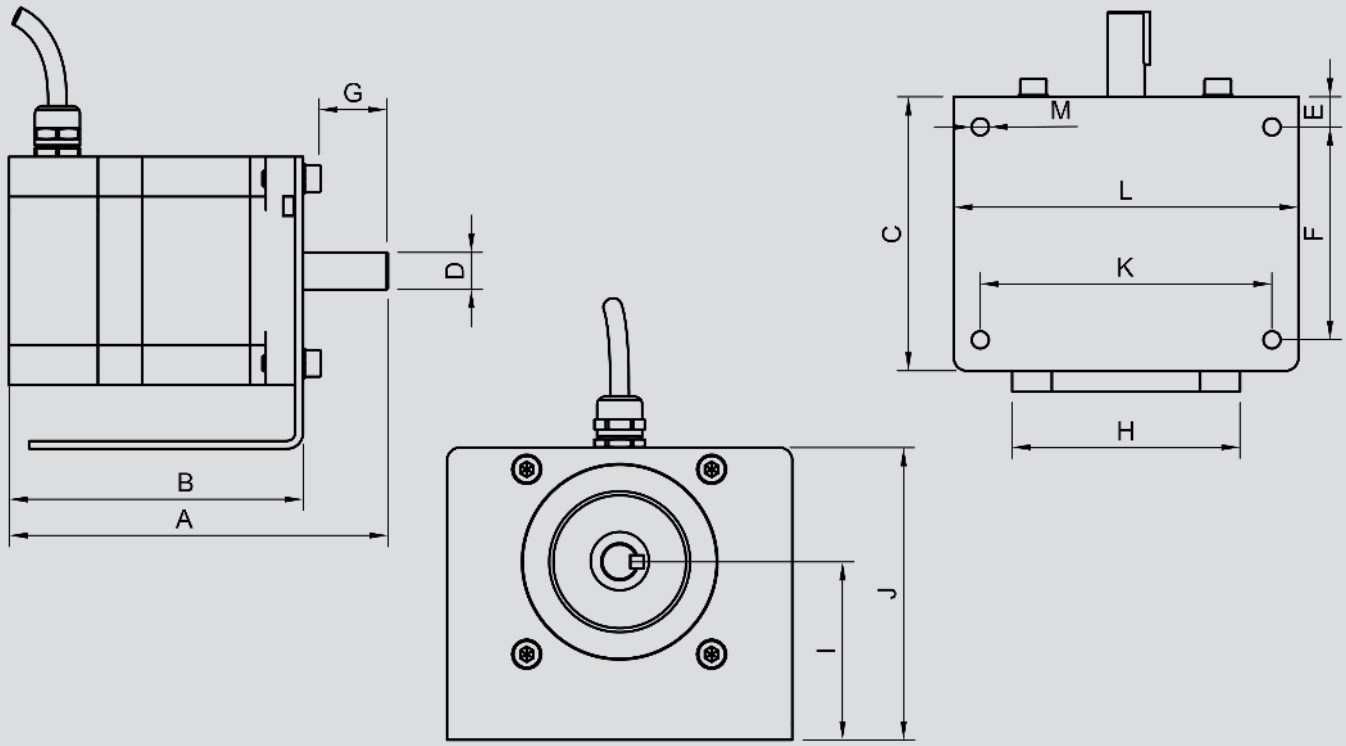


| Construction dimensions (mm) | | | | | | | | | | | | |
|---|---|---|---|---|---|---|---|---|---|---|---|---|
| A | B | C | D | E | F | G | H | I | J | K | L | M |
| Max 146 | Max 113.19 | 103 | 14 | 11.35 | 80 | 25.4 | 86 | 67 | 110 | 110 | 130 | 6.5 |

## Technical data

| VariMax-motor NG | 25 |
|---|---|
| Max torque | 2 Nm |
| Min speed | 1 rpm |
| Max. speed | 350 rpm |
| Motor temp. mantle max | 110 °C |
| Shaft diameter | 14 mm |
| Shaft length | 40 mm |
| Ambient temperature | -30 - +45 °C<br>-40 - +45 °C *) |
| Ambient temperature during transport and storage | -40 - +60 °C |
| Maximum operating altitude for the motor | 1000 m |
| Protection form | IP54 |
| Weight incl. motor bracket | 2.6 kg |
| Dimensions incl. shaft and moter bracket HxBxL | 130x130x141 mm |

*) Note, at -40 °C, the control unit must be connected to power all the time

## Max rotor diameter at rotor speed 12 rpm

| Motor | 25 |
|---|---|
| Rotor diameter | 1500 mm |